Government Organization 2021
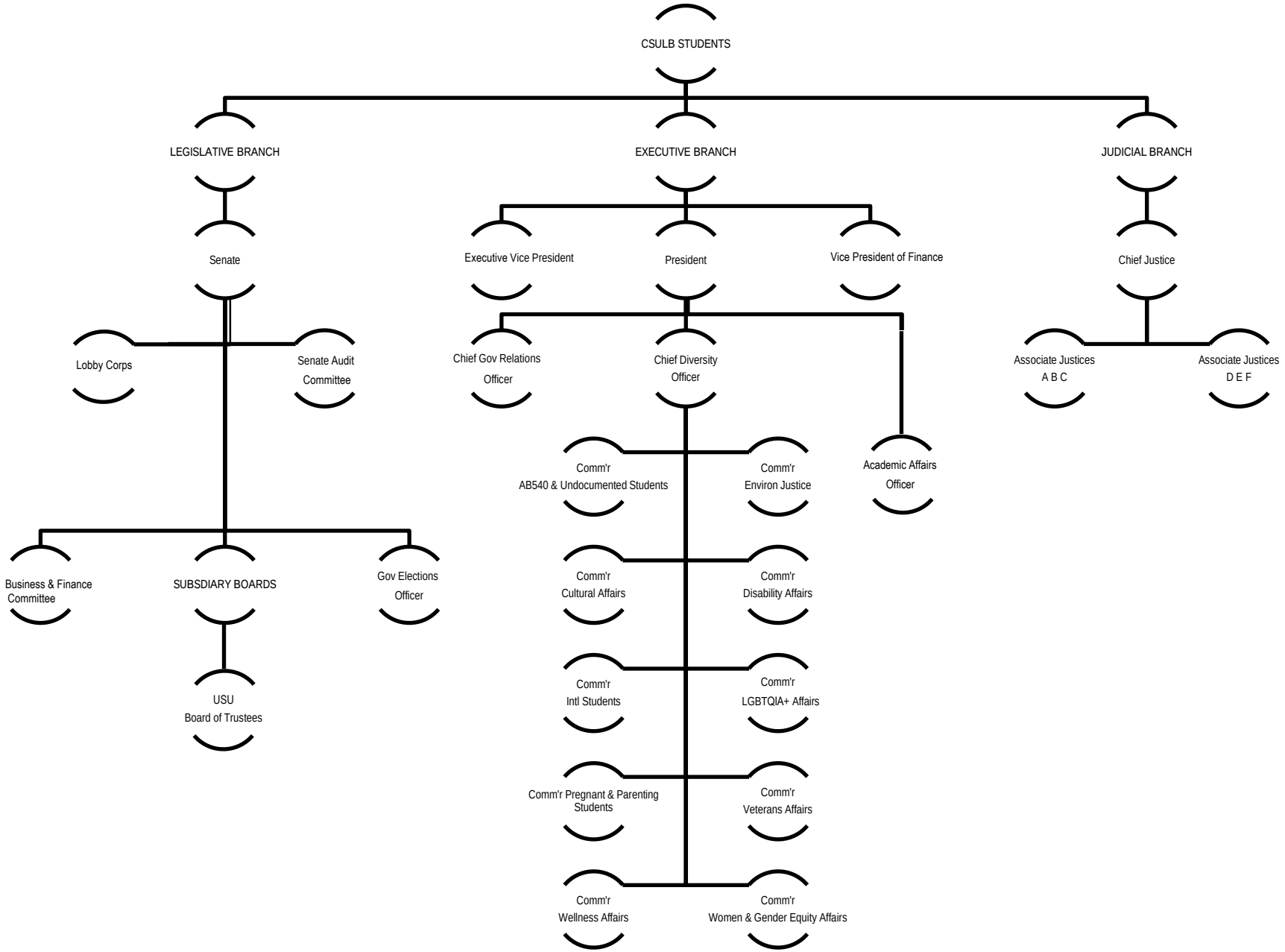
Rev. 5/6/21